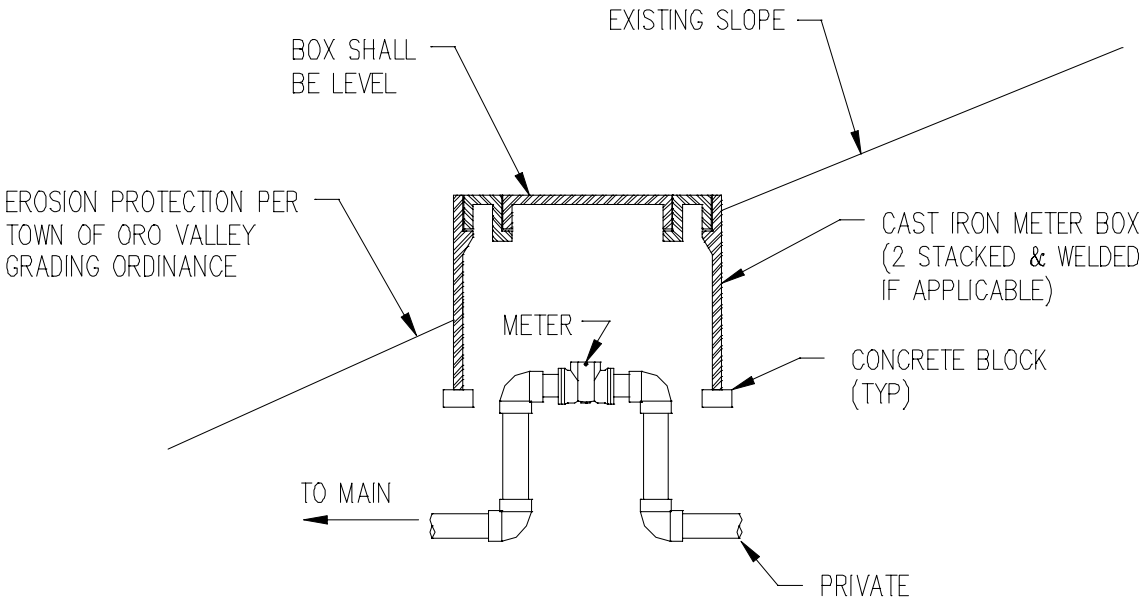

ORO VALLEY ARIZONA FOUNDED 1974	SPECIAL METER BOX DETAIL BY APPROVAL OVWU ONLY 1:1 MAXIMUM SLOPE	DETAIL NO. OVWU–105 AUGUST 8, 2000	SHEET 1 OF 1