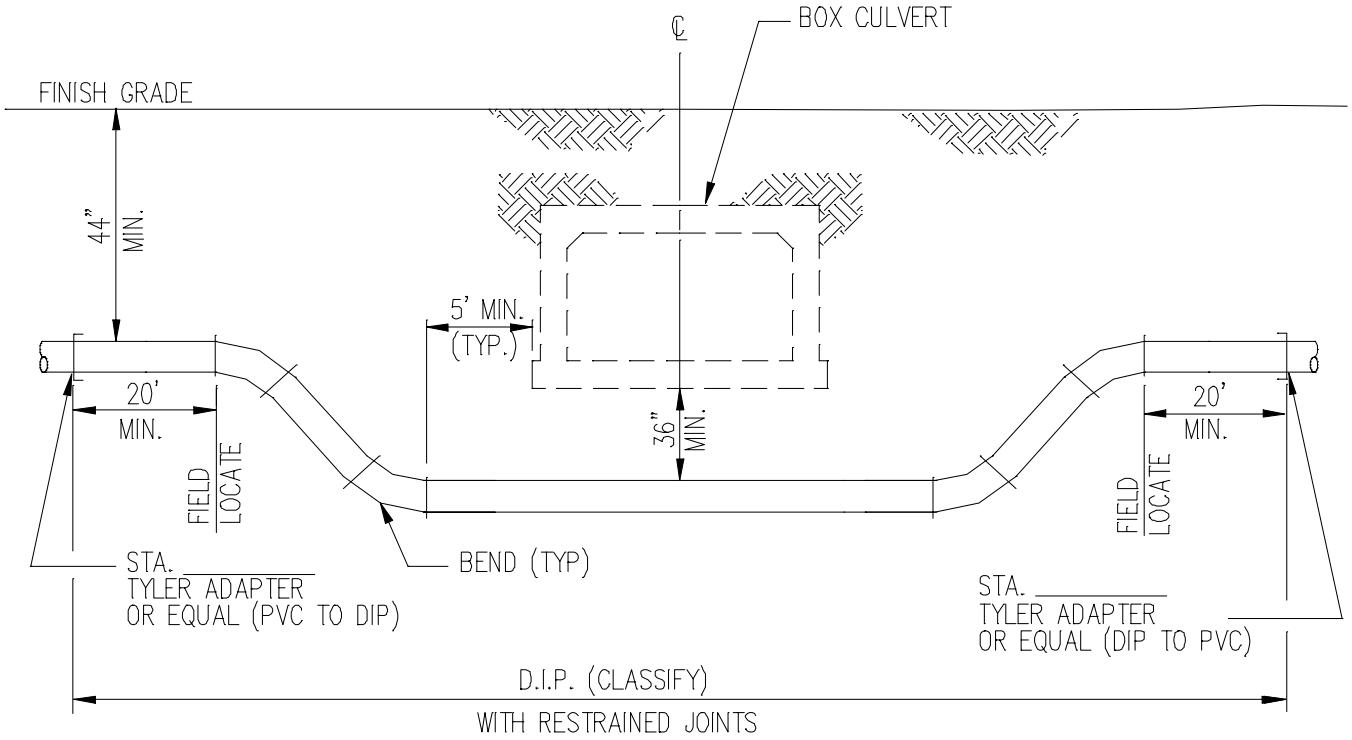

ORO VALLEY ARIZONA FOUNDED 1974	BOX CULVERT CROSSING DETAIL FOR 4" TO 12" WATER MAINS	DETAIL NO. OVWU-104 AUGUST 9, 2000	SHEET 1 OF 1