TABLE OF CONTENTS

Page

GENERAL WATER SYSTEM NOTES 1
Pre-construction Notes (PC) 1
Materials (MS) 4
Backflow Prevention (BP) 5
Detector Tape and Tracer Wire (DT) 6
Water Services (WS) 7
Air Release Valve Assemblies (AR) 9
Drain Valve Assemblies (DV) 10
Final Construction Notes (FCN) 11
Design Notes (DN) 12

STANDARD DETAILS (follows text) **Detail No.**

Tracer Wire and Drain Valve Assembly Detail OVWU-100
Air Release Vault Detail (2" and smaller) OVWU-101
Valve and Valve Box Installation OVWU-102
Drainage Structure Crossing Detail (for 4" to 12" water mains) OVWU-103
Box Culvert Crossing Detail (for 4" to 12" water mains) OVWU-104
Special Meter Box Detail by Approval OVWU only (1:1 max slope) OVWU-105
Water Quality Sampling Station (typical installation) OVWU-106
PRV Vault Detail OVWU-107
Pipe Support Saddle OVWU-108

GENERAL WATER SYSTEM NOTES

PRE-CONSTRUCTION NOTES (PC)

1. **All construction shall conform to "Tucson Water Standard Specifications and Details, 2001 Edition" except as modified herein. Said standards shall remain onsite at all times during construction**.

2. Contractor shall notify Oro Valley Water Utility (OVWU) a minimum of five (5) working days prior to any construction to schedule a pre-construction conference. Work shall not commence until a "Notice to Proceed" has been issued by OVWU and the certification of "Approval to Construct" has been received by OVWU from the Pima County Department of Environmental Quality. Any pipe installed prior to the "Notice to Proceed" shall be removed by the Contractor at his own expense.

3. The Contractor is required to contact "Blue Stake" (1-800-782-5348) 48 hours prior to any excavation to determine accurate utility locations.

4. Water mains to be installed after sewer installation and grading of streets and walk areas to within six (6) inches of final grade for new construction.

5. A registered engineer or a registered land surveyor must certify that the grade is within six (6) inches of final grade and provide layout sheets prior to Notice to Proceed, for new construction.

6. Contractor to provide all cut sheets, shop drawings, and equipment lists at pre-construction meeting with OVWU. Construction shall not begin until OVWU Staff approves all construction materials.

7. All water mains will be inspected before backfill. Final acceptance will not be granted without authorization from OVWU showing inspection has been performed.

8. Contractor to abide by Pima County Department of Environmental Quality (PCDEQ) regulations and procedures and to pay for all inspections and fees. The Owner shall employ the services of a registered professional engineer to inspect the project. The engineer and/or his representative shall inspect the project and shall seal an engineers certificate of completion per Arizona Department of Environmental Quality (ADEQ) requirements. All costs associated with said inspection shall be paid for by the Owner prior to acceptance by OVWU. All fees to be paid in full before acceptance of water system.

9. Line extension agreements must be fully executed and in the Utility's possession before any water service will be provided.

10. Contractor shall field verify location of all existing utilities prior to construction.

11. Contractor shall verify horizontal and vertical locations of existing mains for proposed connections prior to commencement of work.

12. Water mains to be installed with a minimum of forty-four (44) inches of cover for all mains twelve (12) inches and smaller under pavement, except as otherwise noted on these plans. All mains installed outside pavement shall be installed with a minimum of sixty (60) inches of cover.

13. Where water mains cross existing or future drainage structures, a minimum vertical separation of twenty-four (24) inches is required above structure. If new water mains cannot be installed above said structures and maintain minimum cover at the vertical separation specified, it will be necessary to install the new main thirty-six (36) inches below the drainage structure, using DIP per detail (OVWU-103).

14. All water mains and private fire lines to have a minimum horizontal separation from sewer mains of six (6) feet and a minimum vertical separation of two (2) feet. Sanitary sewer HCS's, which cross over water mains, shall have a minimum vertical separation of six (6) inches and shall be DIP. (See PCDEQ standard for force mains.)

15. When a sewer main crosses a water pipe at a point at which the sewer is two (2) feet or more below the water pipe, extra protection is not required. At all other crossings, the sewer and water pipe shall be constructed of ductile iron pipe with mechanical joints, or approved equal, for a distance of at least ten (10) feet in each direction measured perpendicular to the outside edge of the waterline. (Requirements per ADEQ Engineering Bulletin No. 10, Chapter 7.)

16. Electric lines shall not be installed within a horizontal distance of five (5) feet from a water main unless shown in a joint trench detail on the approved plans.

17. No connection to the existing OVWU system will be permitted unless prior approval has been obtained in writing from an OVWU representative.

18. If new construction requires the water to be shut off to make the tie-ins to the existing system, the contractor shall provide OVWU with a written schedule of the proposed connections at least forty-eight (48) hours prior to the start of such tie-ins. However, no water will be turned off until all affected water users have been notified by the Contractor of the Schedule not less than twenty-four (24) hours before water is to be turned off.

19. The Contractor is required to notify all water users in the immediate vicinity of any possible service interruption or inconvenience during construction and is to provide a 24-hour phone number at which the contractor can be reached in the event of customer inquiry.

20. The Contractor shall notify OVWU a minimum of five (5) working days prior to any construction that may come in contact with transite (AC) pipe. If removal of AC pipe is necessary, a certified Contractor shall remove and dispose of all AC pipe material under all current codes and regulations.

21. Oro Valley Water Utility is not responsible for providing fire flow.

22. The Contractor shall provide OVWU staff with manufacturers' recommendations for pipe deflection prior to construction. The maximum allowed piping deflection shall be half (1/2) of the manufacturers' recommendations.

23. Contractor shall protect waterlines from any contamination at all times. All costs of repair or replacement of pipe due to contamination shall be the sole responsibility of the Contractor.

MATERIALS (MS)

1. All pipe shading and bedding material shall be imported clean sandy material conforming to Tucson Water Standard specification 0209.0309.

2. All fire hydrant runs to be constructed with restrained joints DIP Class 350.

3. All water mains shall be constructed with gate valves, with box and cover, in accordance with Tucson Water standard specifications.

4. Adjust valve boxes to four inches above finished grade when outside of pavement and provide tapered concrete collar to finished grade.

5. All DIP runs will be mechanical joints, with mega-lug DIP, wrapped in plastic. DIP to be class 350, or OVWU-approved equal. During installation of DIP drainage crossings, the OVWU reserves the right to have the Contractor make modifications of crossings, as they deem necessary.

6. Valve nut extensions, if required, shall be supplied and installed by the Contractor per Tucson Water Standard Detail No. 305.

7. All mechanical joint (MJ) fittings to be the megalug restraint type design or approved equal, and all installation for thrust control on all pipelines shall per Tucson Water Standard 600.

8. Solid sleeve adapters shall be required for all piping transitions. Adapters shall have MJ fittings Tyler models, 12 inches minimum in length, or approved equal.

9. Cast iron solid sleeve tapping sleeves shall be required on all AC taps and size on size taps.

10. The only approved piping material for water lines are: Copper type K with compression fittings, PVC, (C900) - Class 200, and DIP Class 350.

11. For Water Quality Sampling Station materials see detail OVWU-106.

12. Water Quality Sampling stations shall be installed at a minimum of 3,000 linear feet apart in each development. OVWU staff shall denote each location on the preliminary design submittal. Each development shall require a minimum of one (1) sampling station.

13. All fittings and bell restraints used on DIP and PVC pipe shall be polywrapped using a double wrap with seams 180 degrees apart.

14. Fire hydrants approved for use are: Mueller standard issue, Waterous WB77 Trend, M&H 129, American Darling, Kennedy, and AVK2700.

BACKFLOW PREVENTION (BP)

1. The prevention of backflow in a potable water supply system is necessary to prevent contamination or pollution of the water supply. Prevention is accomplished by the use of air-gap separations or by mechanical backflow prevention assemblies. Air-gap separations and backflow prevention assemblies shall be installed according to current Tucson Water Standard Details to assure protection of the public water supply system.

2. All construction water will be metered with an appropriate size water meter and backflow prevention assembly. Contractor shall be responsible for obtaining the water meter form OVWU. Backflow assemblies to be provided by Contractor.

3. Contractor shall install an approved backflow prevention assembly per Tucson Water Standard Details on all commercial, irrigation, and temporary construction water services. For a list of approved backflow prevention assemblies contact OVWU.

4. All BFA serving four (4)-inch to ten (10)-inch mains are to be constructed per UPC standards.

5. A permit is required before installing or replacing a backflow assembly. Permits shall be obtained at OVWU.

6. All BFA installations shall be inspected and approved by OVWU.

7. All BFA's must be tested by a state certified Backflow Prevention Tester prior to water usage.

8. A copy of a completed test form must be submitted to OVWU before water usage.

9. Submittals for said assemblies shall be submitted to OVWU for review and approval prior to construction.

DETECTOR TAPE AND TRACER WIRE (DT)

1. Contractors to install detector tape above all water lines and water services. Tape is to be placed one (1) foot, zero (0) inches below final grade.

2. The Contractor is required to install one #12 UF Standard direct burial wire below the pipe with three (3) foot loops brought up around valve risers. Valve risers are to be field selected by the OVWU or their representative (OVWU-100).

3. The tracer wire is to be certified by a licensed electrical contractor for continuity after paving operations is complete. Final acceptance will not be granted until certification is received by the OVWU. Splices need to be made silicon splice and must be inspected. Signal-induced test results will not be accepted.

4. Tracer wire to be brought up on all blowoffs and in-line valves.

5. Any hydrant runs that contain bends will require tracer wire.

WATER SERVICES (WS)

1. The developer/applicant shall have all curb stops located and protected during all phases of construction.

2. Set curb stops eight (8) inches behind back of curb or walk (as applicable) from street with curbs and eight (8) inches below finish grade.

3. Set curb stops three (3) feet from property line for streets without curbs and eight (8) inches below finish grade.

4. Curb stops shall not be installed at the same lot corners as the electrical service. The water and electrical service must have a minimum horizontal separation of five (5) feet, zero (0) inches where this cannot be accomplished.

5. Meter boxes and lids are to be furnished by Contractor/Developer and installed to finish grade by Contractor. Developer/applicant shall have meter boxes, lids, and water meters protected during all phases of construction. Developer will be responsible to replace any meters, meter boxes, or services should they be damaged during any construction phase. All meter box sizes shall conform to OVWU standards. Meter box shall be installed to one-tenth (0.1) foot above finish grade. (See note this sheet for meter box requirements).

6. Water services in concrete driveways, sidewalks or curbs are not allowed without the prior approval of the Utility. Water services or meter boxes and lids installed within concrete paved driveways, sidewalks, or curbs must be traffic rated and upsized one (1) size per Note No. WS 7.

7. Meter box requirements:

3/4" meter use	#2 meter box
1" meter use	#2 meter box
1 1/2" meter use	#3 meter box
2" meter use	#3 meter box

8. Water service to remain marked during construction. Any relocation of services to be provided by developer, including height adjustments. Notify OVWU in advance of any relocation or adjustments.

9. Paving contractor to mark curbs with "W" at all service locations.

10. Contractor to consult with OVWU staff prior to installing angle meter stops two (2) inches and larger.

11. Developer or builder is required to install a customer's cutoff ball valve with handle inside of meter box in accordance with the OVWU Code.

12. No services in drainageways or aprons to drainageways will be allowed.

13. Oro Valley Water Utility will not allow three (3) inch water services.

14. There shall be a maximum of one (1) inch from the edge of meter box to the angle meter stop.

15. No private distribution or water service lines are allowed to cross public water mains.

16. Each individual commercial building and each individually recorded residential lot or parcel shall have its own service and meter. Split services for residential lots may be allowed with prior approval from the Utility.

17. All commercial, residential common area and park landscape irrigation systems shall have their own service and meter.

AIR RELEASE VALVE ASSEMBLIES (AR)

1. The location of air release valve assemblies shown in these plans is for information purposes only. The Contractor shall field verify the location of high points in the water main. Valve box and covers shall be installed three (3) inches above existing ground (see detail) and in accordance with Tucson Water Standard Detail No. 330. Air release valve assemblies shall not be installed in streets, driveways, or sidewalks.

2. All air release valves shall be Armstrong AR21 for 3/4" size and Crispin UL type for 1" to 2" sizes (combination air release and vacuum). All air release valves shall have stainless steel or brass netting installed on elbow (OVWU-101).

DRAIN VALVE ASSEMBLIES (DV)

1. All drain valve assemblies shall have concrete collars and shall be to Town of Oro Valley Water Utility specs (OVWU-100) and have approved traffic rated cast iron boxes and lids.

2. All drain valve assemblies (DVAs) to be modified DVAs per Tucson Water Standard Detail No. 405, except in cul-de-sacs, which shall be per Tucson Water Standard Detail No. 400. A minimum of twenty (20) feet between the drain valve and main line valve shall be maintained. No service line connection shall be made within these twenty (20) feet.

FINAL CONSTRUCTION NOTES (FCN)

1. The Contractor shall submit a "Preliminary Flushing Sequence" to the water utility representative for approval prior to flushing. The submittal shall be per Tucson Water's Office Procedure No. 6, "Preliminary Flushing Sequence." Copies are available at the Tucson Water Engineering Office.

2. Existing dead-end mains shall be thoroughly flushed before tie-ins are made to new lines being installed by this project.

3. Disinfection to be performed in accordance with ADHS Engineering Bulletin No. 8. Chlorine for use in lines shall be approved by OVWU to be liquid with no residuals.

4. The Contractor shall notify Town of Oro Valley Water Utility five (5) working days in advance for scheduling water main bacterial testing. Oro Valley Water Utility will notify PCDEQ for line Chlorination tests.

5. No tie-ins to existing water mains will be allowed until bacteriological testing results are reported negative.

6. "As built" plans stamped by a professional engineer to be provided before acceptance by Oro Valley Water Utility (Mylar and two [2] bluelines).

7. The Developer/Applicant shall have all water valves identified and located prior to paving and shall have all valve boxes set to final grade after paving, or final grading if not in a paved area.

8. After the paving, curbs, and sidewalks have been installed, an OVWU representative will check all valve risers, water services, meter boxes, and fire hydrants for operation and field adjustment prior to final approval.

9. Final acceptance will not be granted until the pipe certification, backfill certification with testing results, valve certification, pressure test, and passing microbiological test and PCDEQ certification of "Approval of Construction" have been received by the OVWU representative.

10. If the project is not fully completed, a bond in the amount of 120 percent of the estimated remaining cost of construction shall remain in place until project completion. Meters will not be set until said bond is in place.

DESIGN NOTES (DN)

1. It is the design engineer's responsibility to verify the applicability of each standard note and detail for the project.

2. All modifications to said details shall have prior approval from Oro Valley Water Utility and its engineers.

3. All Improvement plans will require a separate cover sheet.

4. All plan detail notes shall be shown using standard note boxes. Keynotes will not be accepted.

5. All commercial and residential development will require the extension of water mains to adjacent property lines and will be required to provide a looped system for their internal distribution systems.

6. A maximum valve spacing interval of 500 feet will be required in order to isolate smaller sections of main and reduce the number of customers out of service during maintenance and repair activities.

7. The minimum width for all water easements is 15'. Additional width may be required for multiple mains, other utilities, or future expansion. All easements must be recorded prior to receiving water service.

8. All fire hydrant runs shall be a maximum of 40 feet in length. Longer runs will be considered as main extensions and will require appropriate main sizing.

9. All main runs serving multiple fire hydrants in commercial developments shall be looped.

10. The design engineer shall submit a cost estimate and material take-off associated with the submitted water plans. This estimate must be submitted along with the final plans. Final approval of the water plans will be withheld until the cost estimate has been received by the Utility.

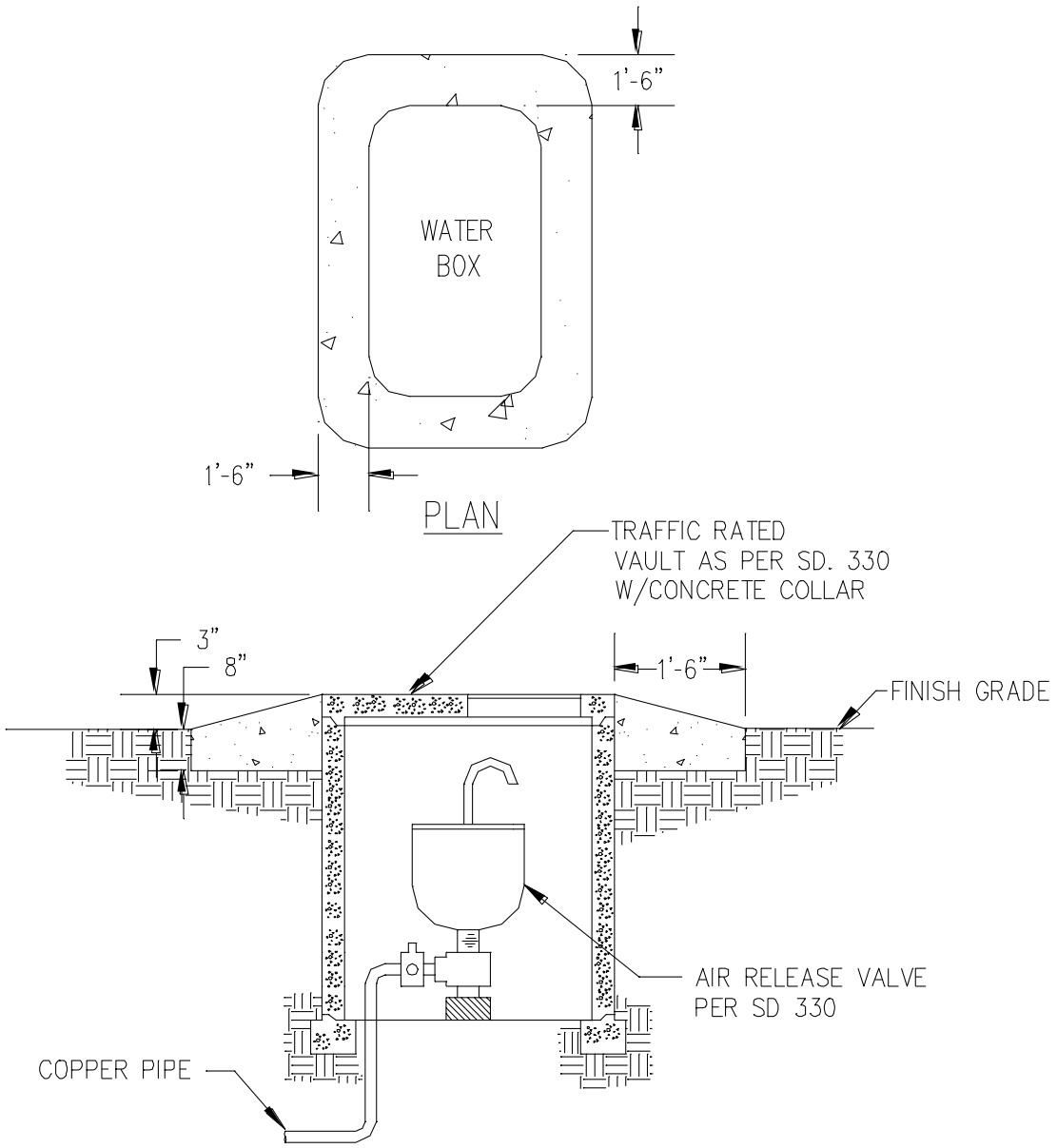

SD 330 REFERS TO STANDARD DETAIL NUMBER FROM "TUCSON WATER STANDARD SPECIFICATIONS AND DETAILS", 1997 EDITION.

ORO VALLEY ARIZONA FOUNDED 1974	AIR RELEASE VAULT DETAIL 2" AND SMALLER	DETAIL NO. OVWU-101 AUGUST 9, 2000	SHEET 1 OF 1

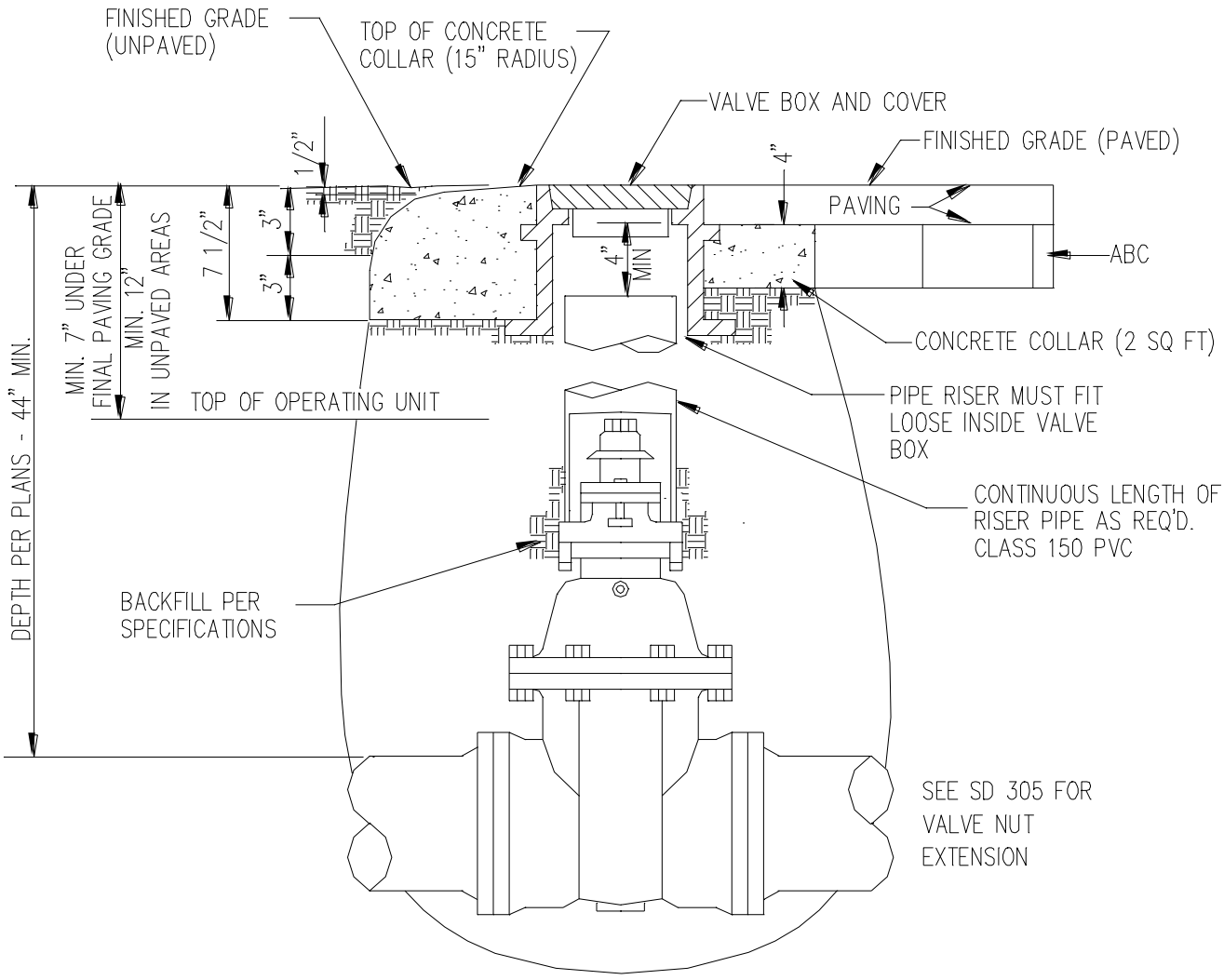

SD 300 AND SD 305 REFERS TO STANDARD DETAIL NUMBERS FROM "TUCSON WATER COMPANY'S STANDARD SPECIFICATIONS AND DETAILS", 1997 EDITION.

ORO VALLEY ARIZONA FOUNDED 1974	VALVE AND VALVE BOX INSTALLATION	DETAIL NO. OVWU-102 AUGUST 9, 2000	SHEET 1 OF 1

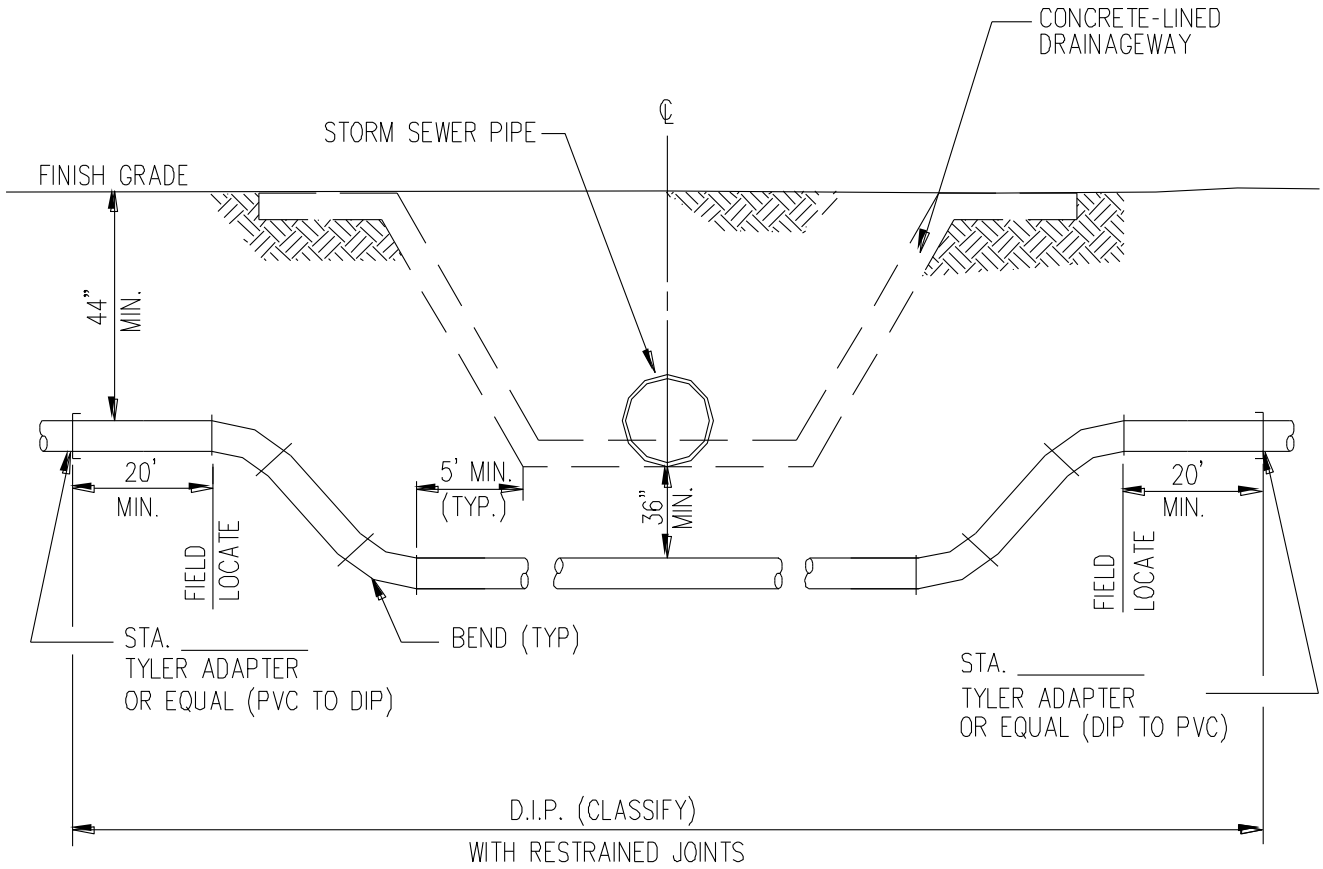

NOTE:

DRAINAGEWAYS W/O CONCRETE LINING WILL BE EVALUATED INDIVIDUALLY.

ORO VALLEY ARIZONA FOUNDED 1974	DRAINAGE STRUCTURE CROSSING DETAIL FOR 4" TO 12" WATER MAINS	DETAIL NO. OVWU-103 AUGUST 9, 2000	SHEET 1 OF 1

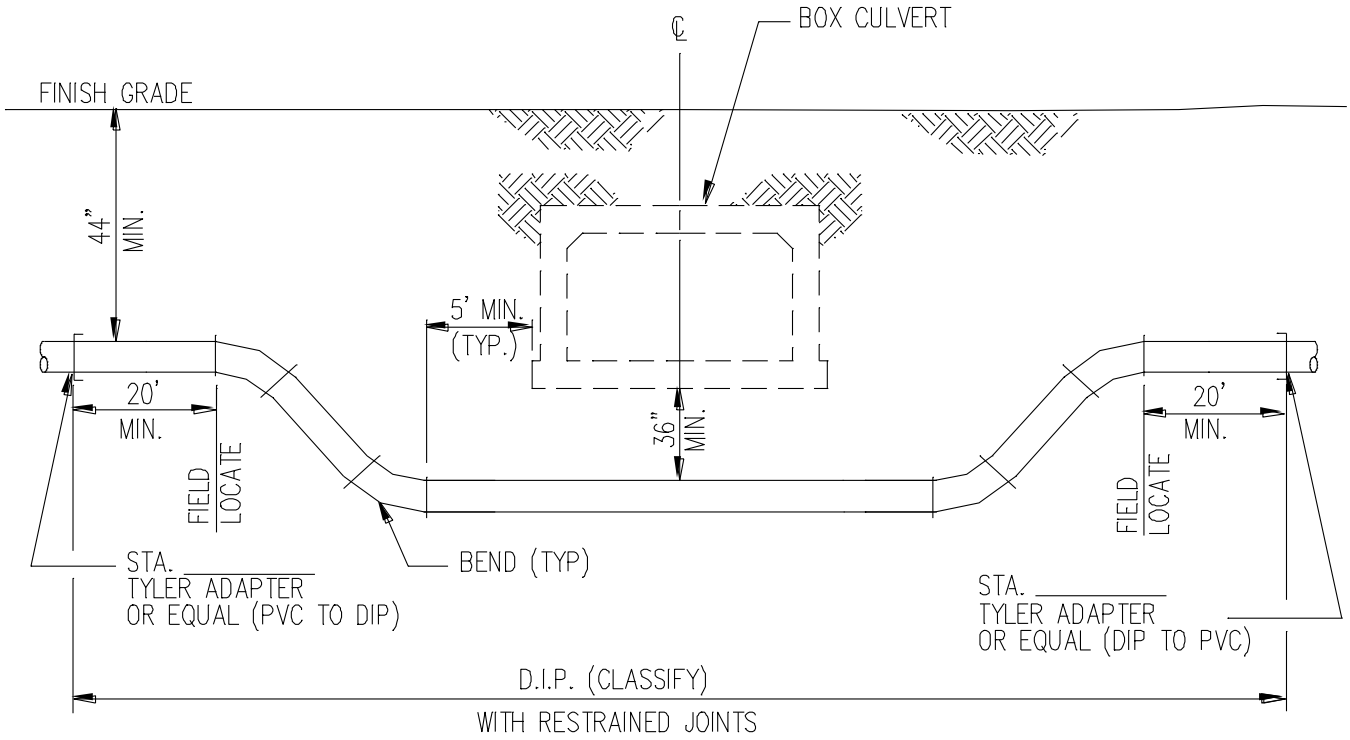

ORO VALLEY ARIZONA FOUNDED 1974	BOX CULVERT CROSSING DETAIL FOR 4" TO 12" WATER MAINS	DETAIL NO. OVWU-104 AUGUST 9, 2000	SHEET 1 OF 1

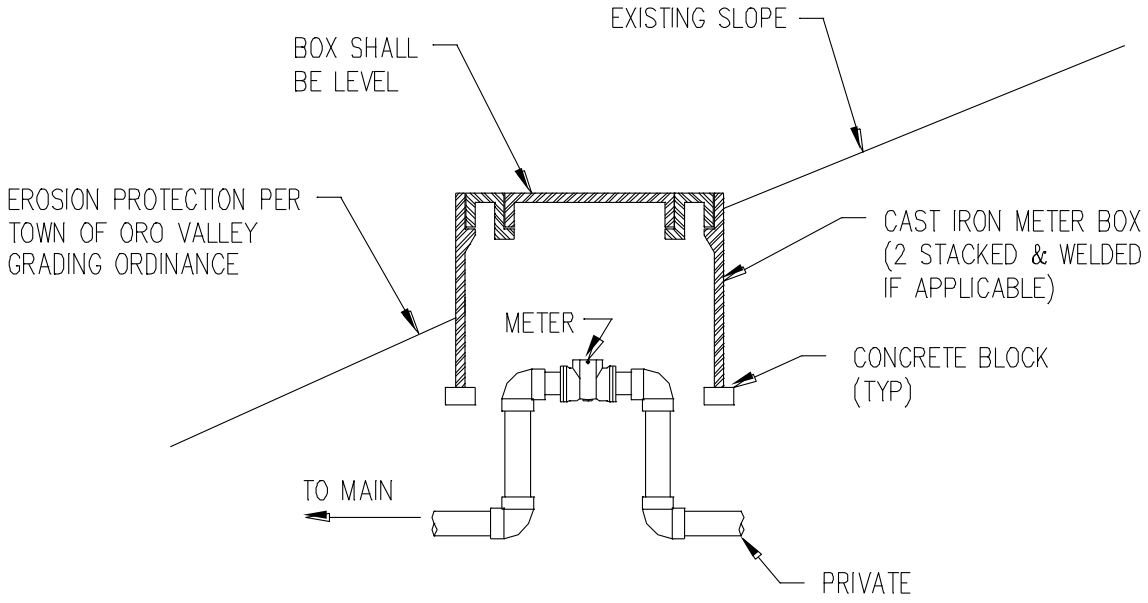

ORO VALLEY ARIZONA FOUNDED 1974	SPECIAL METER BOX DETAIL BY APPROVAL OVWU ONLY 1:1 MAXIMUM SLOPE	DETAIL NO. OVWU–105 AUGUST 8, 2000	SHEET 1 OF 1

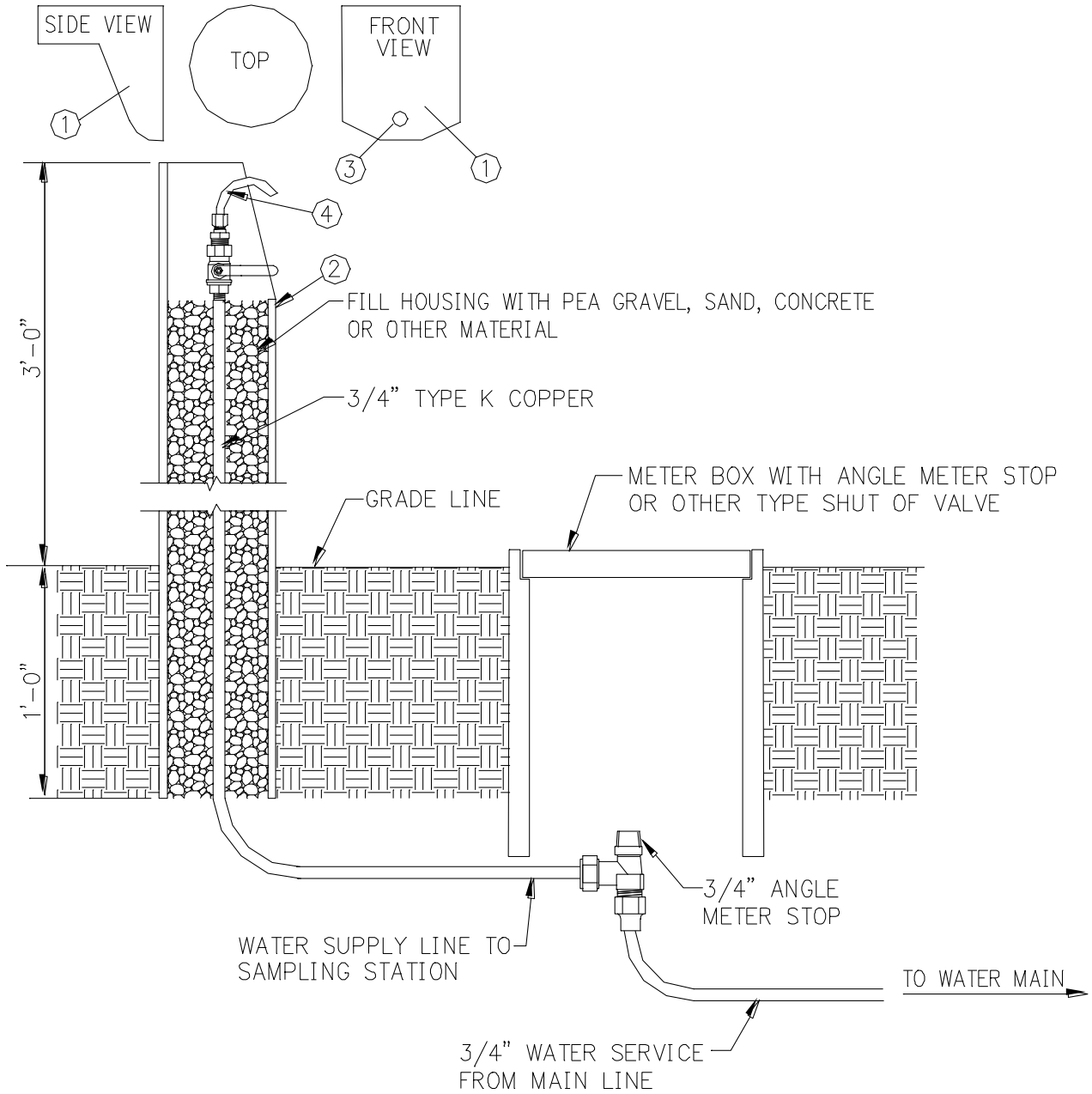

* WATER QUALITY SAMPLING STATION	
1	ALUMINUM LID
2	ALUMINUM HOUSING-6" DIA. (O.D.)
3	FLUSH MOUNTED LOCK
4	1/2" x 3/8" BALL VALVE

* ONLY ITEMS 1-4 INCLUDED

ORO VALLEY ARIZONA FOUNDED 1974

WATER QUALITY SAMPLING STATION

TYPICAL INSTALLATION

DETAIL NO.

OVWU-106

AUGUST 8, 2000

SHEET 1 OF 1

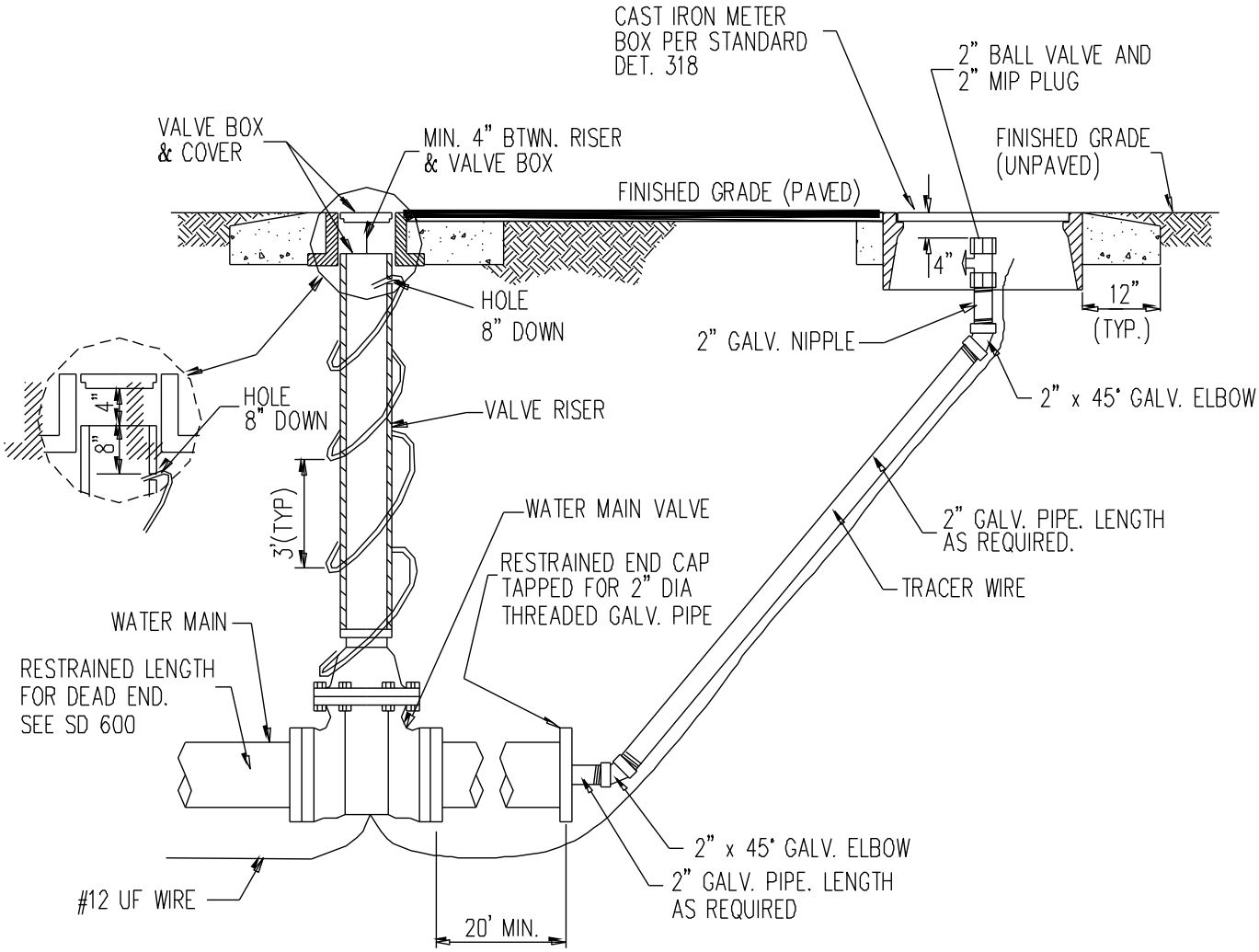

NOTE:

VALVE JOINTS AND END CAP SHALL BE MECHANICALLY RESTRAINED. NO SERVICES SHALL BE INSTALLED BETWEEN VALVE AND END CAP. 12" AND LARGER MAINS SHALL REQUIRE 3" DRAIN VALVE ASSEMBLY.

ORO VALLEY ARIZONA FOUNDED 1974	TRACER WIRE AND DRAIN VALVE ASSEMBLY DETAIL	DETAIL NO. OVWU-100 MARCH 24, 2002	SHEET 1 OF 1

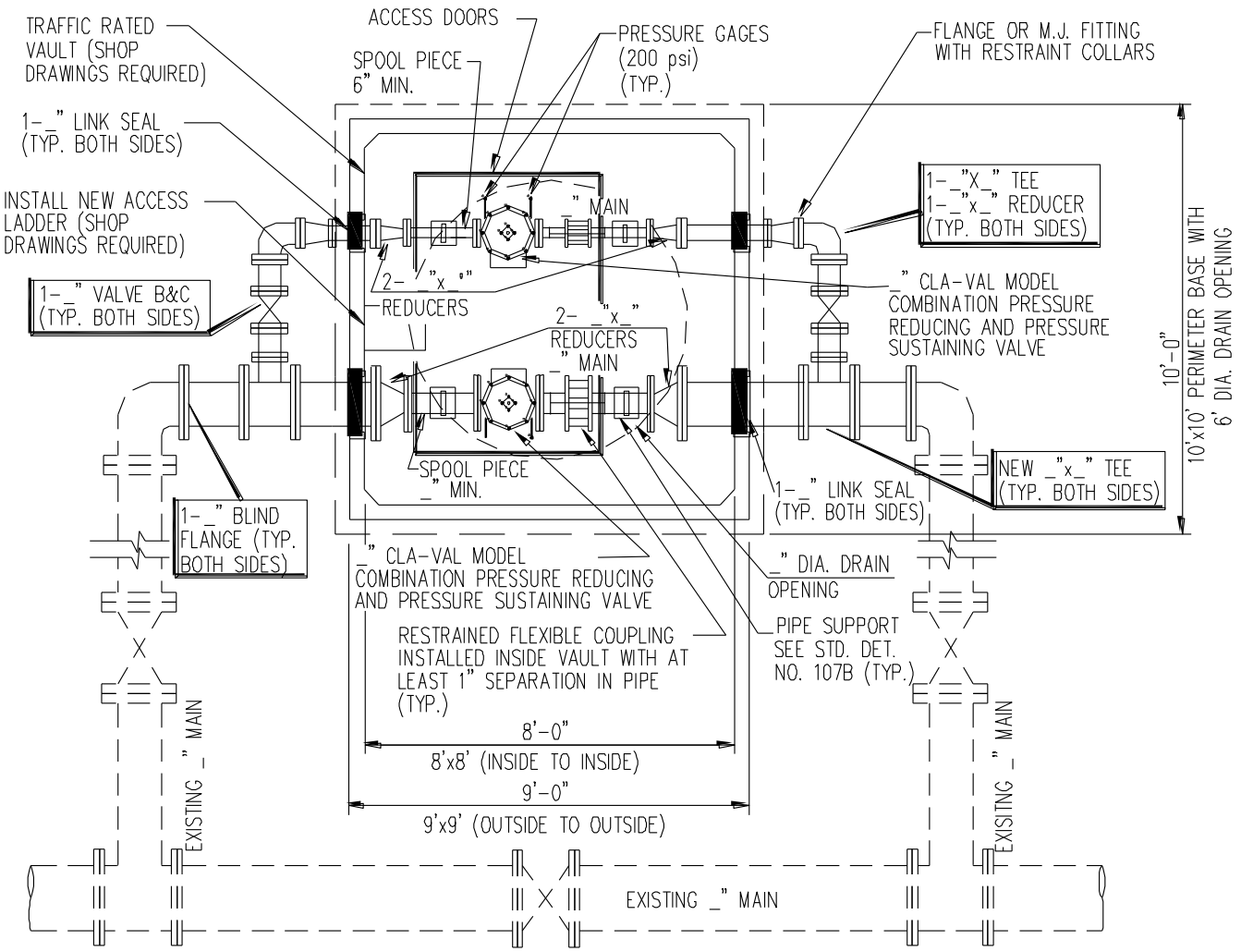

ZONE SETTINGS

_ - ZONE HIGH WATER	=	
_ - ZONE HIGH WATER	=	
PRV VALVE ELEVATION	=	
_ - ZONE STATIC	=	
_ - ZONE STATIC	=	
SET PRV OPEN	=	(FINAL SETTINGS TO BE DETERMINED BY O.V.W.U.)
SET PRV CLOSE	=	

NOTES

1. CONTRACTOR TO FIELD VERIFY LOCATION OF EXISTING WATER FACILITIES AND OTHER UTILITIES.
2. EXACT PRV LOCATION TO BE FIELD DETERMINED IN COORDINATION WITH ENGINEER AND O.V.W.U. FIELD INSPECTOR
3. ALL PIPING SHALL BE FLANGED DUCTILE IRON PIPE (CLASS 350) WITH ALL JOINTS RESTRAINED
4. TRAFFIC RATED VAULT DEPTH=7'0". SHOP DRAWING AND CALCS. REQUIRED. (H20 LOADING)
5. COMPACT EARTH UNDER VAULT TO 95% MODIFIED PROCTOR DENSITY AND PLACE ON 12" OF 1/2" GRAVEL.
6. CONTRACTOR TO INSTALL 6'x4' ALUMINUM ACCESS DOORS IN AREAS OUTSIDE OF PAVEMENT (SHOP DRAWINGS REQUIRED).
7. CONTRACTOR TO INSTALL TRAFFIC RATED MANHOLE'S (H20 LOADING) WHERE VAULTS ARE LOCATED WITHIN PAVEMENT.

ORO VALLEY ARIZONA FOUNDED 1974

PRV VAULT DETAIL

DETAIL NO.
OVWU-107

MARCH 25, 2002

SHEET 1 OF 1

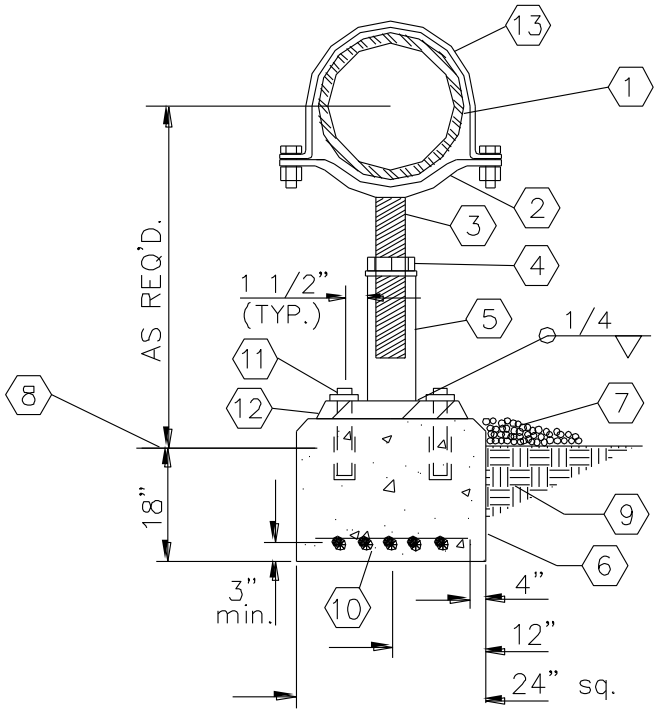

EQUIPMENT ⬡

1. STANDARD STEEL PIPE
2. SADDLE
3. 2" ALL THREAD
4. LOCK NUT
5. 3" RISER PIPE
6. 3000 PSI CONCRETE PER PC/COT STANDARD SPEC. 1006.
7. 2" LAYER OF GRAVEL
8. FINAL GRADE
9. UNDISTURBED SOIL OR 95% MINIMUM COMPACTION.
10. 4 X 4–W2.9/W2.9 WWF OR 5–#3 RE–BARS @ 4" O.C., BOTH WAYS.
11. 6" x 3/4" DIA. ANCHOR BOLTS WITH EPOXY GROUT (4 EACH)
12. 10" SQ. x 3/4" THICK STEEL PLATE
13. STEEL YOKE WITH STEEL NUTS.

NOTES:

1. "GRINNELL" ADJUSTABLE PIPE SADDLE SUPPORT, FIG. 259 OR EQUAL.
2. "VERTICAL ADJUSTMENT" IS OBTAINED BY TURNING "LOCK NUT NIPPLE."
3. HORIZONTAL CONCRETE SURFACES SHALL BE FORMED WITH 1½" CHAMFER.

ORO VALLEY ARIZONA FOUNDED 1974	PIPE SADDLE SUPPORT DETAIL	DETAIL NO. OVWU–108 MARCH 25, 2002	SHEET 1 OF 1